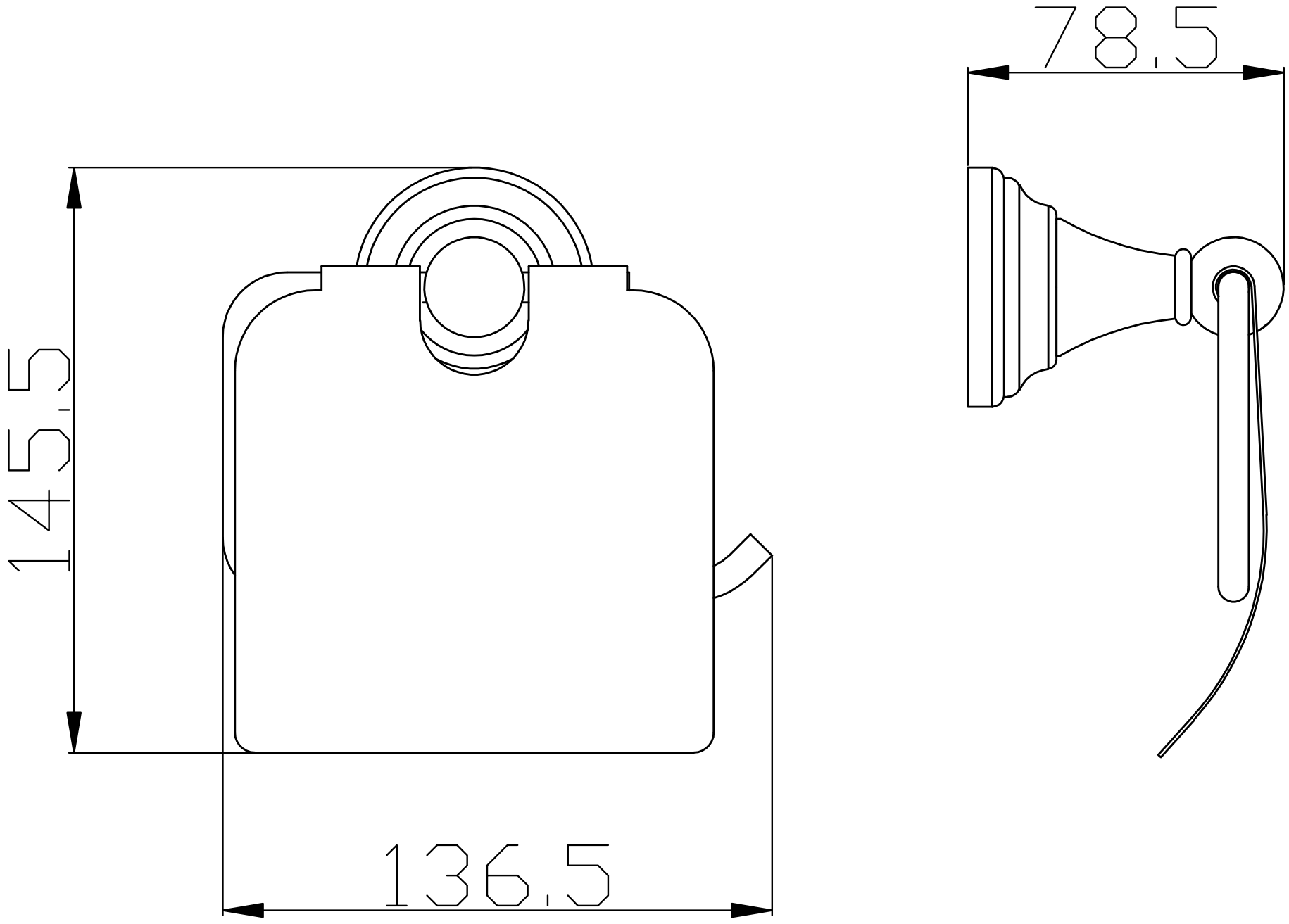
78.5
145.5
136.5