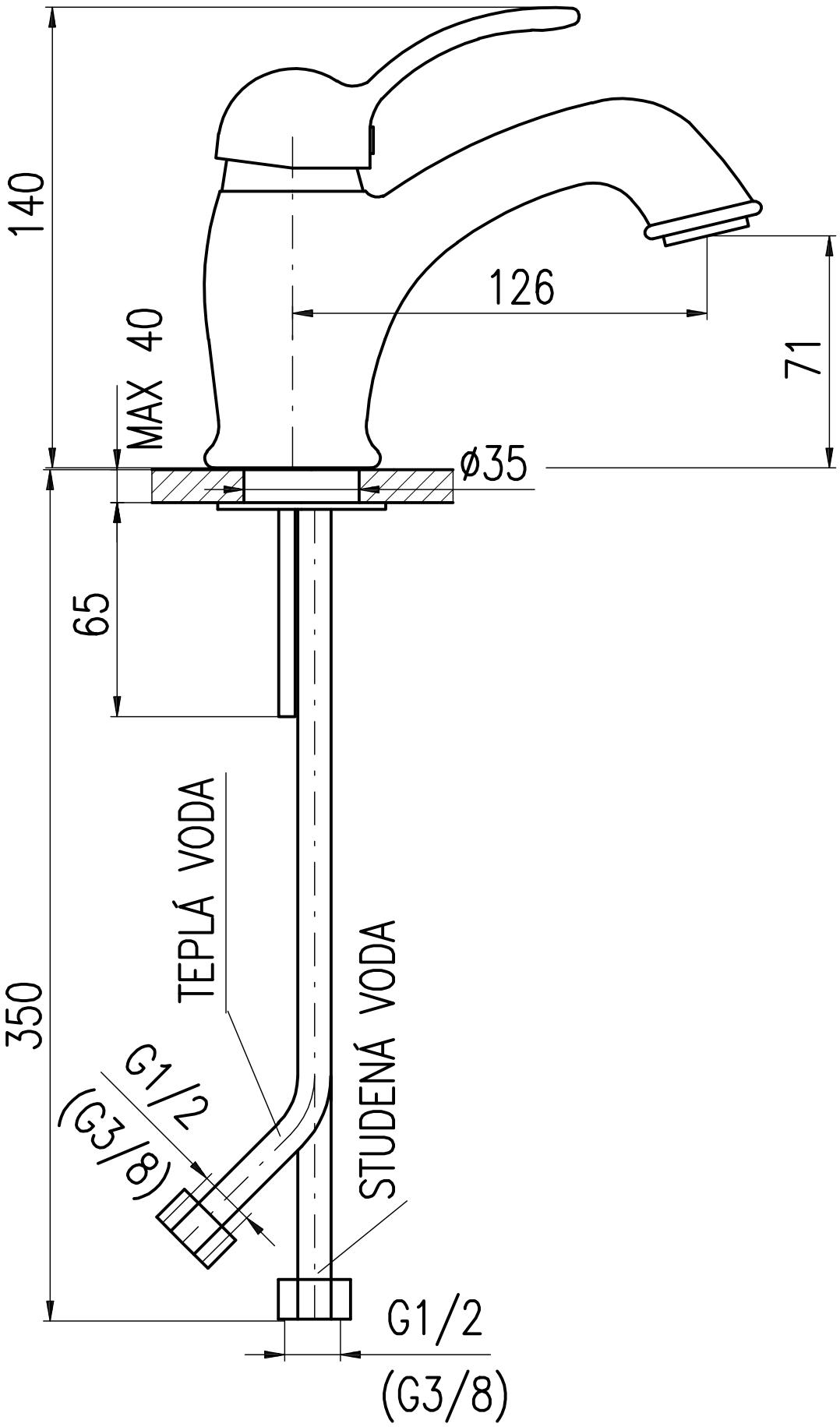
140
126
71
MAX 40
ø35
65
350
TEPLÁ VODA
STUDENÁ VODA
G1/2
(G3/8)
G1/2
(G3/8)